3-Feet Open Corner Open Back

Table Covers Now

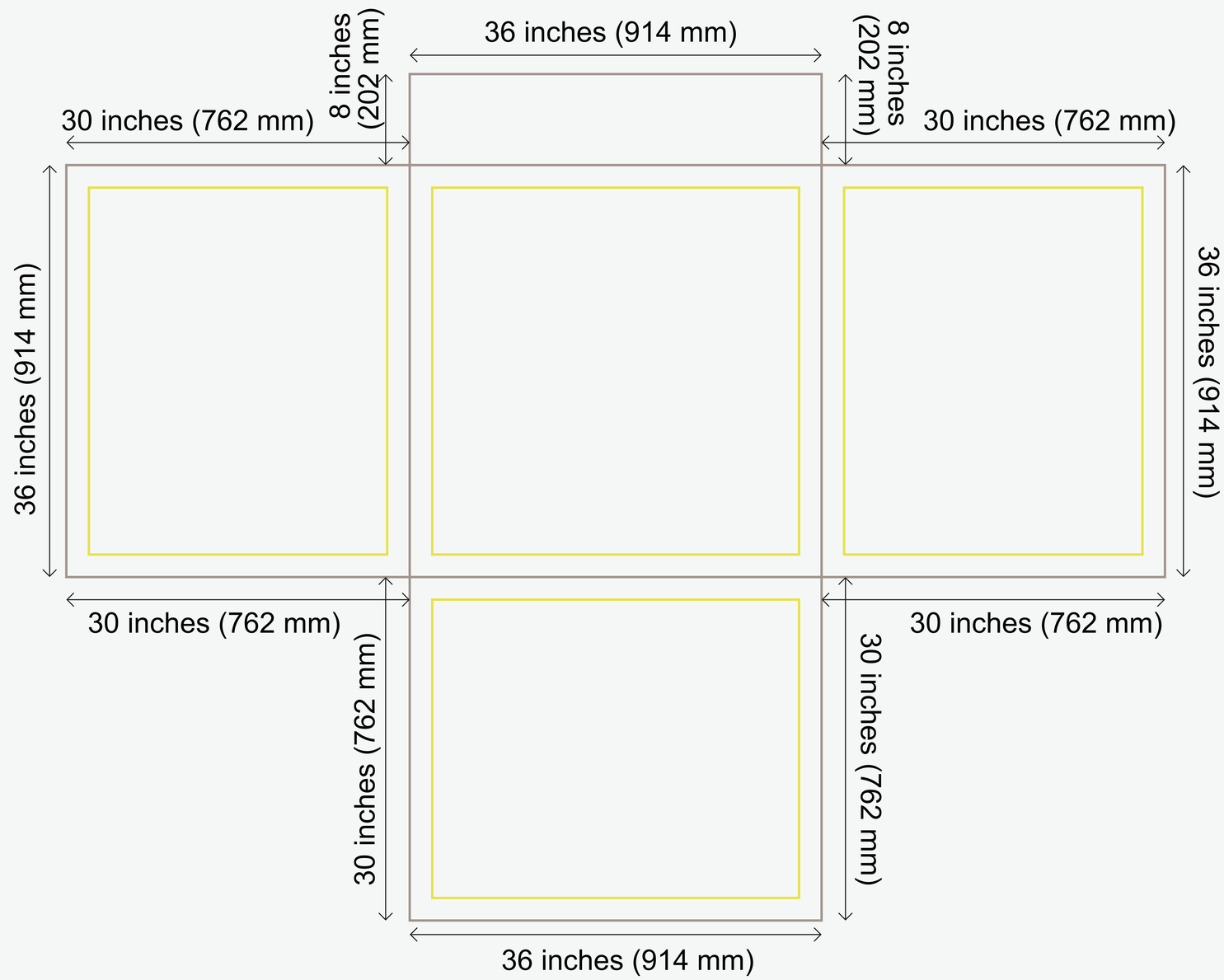

Order Num:
Quantity: PC

Square 3 Feet Open Corner Open Back
Table Size: 3 feet x 3 feet x 30 inches

Table Size

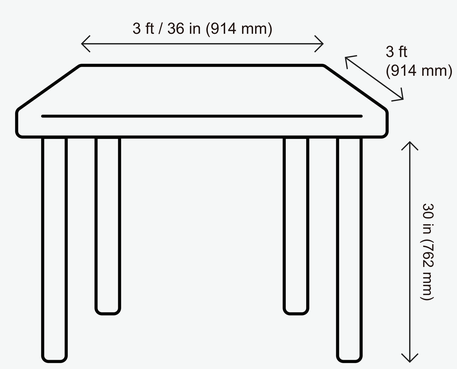

Front

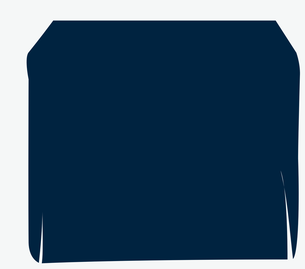
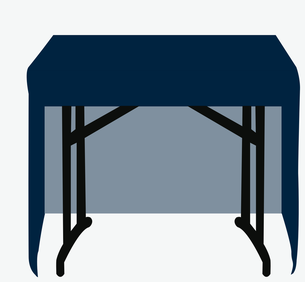
Back